G series SCARA robot

G10/G20

G10

For high-speed, multi-effector assembly, kitting, and packing applications

■ Ideal for mid-range payloads up to 10kg

G20

For fast, efficient, high-payload handling and batch-packing applications

■ Handles heavy payloads up to 20kg

■ G10/20 specifications

Arm length		650 mm	850 mm	1000 mm
Payload	G10	Rated 5 kg / Max 10 kg		
	G20	Rated 10 kg / Max 20 kg		
Standard cycle time		0.34 sec	0.37 sec	0.42 sec
Repeatability	Joint #1, #2	±0.025 mm		
	Joint #4	±0.005°		

■ Specifications

		G10-65**			G10/20-85***			G20-A0***		
Mounting type		Table top	Ceiling	Wall	Table top	Ceiling	Wall	Table top	Ceiling	Wall
Arm length	Arm #1, #2	650 mm			850 mm			1000 mm		
Max. operating speed	Joints #1, #2	8800 mm/s			11000 mm/s			11500 mm/s		
	Joint #3	G10/20-**1**=1100 mm/s /G10/20-**4**=2350 mm/s								
	Joint #4	2400 deg/s			G10=2400 deg /G20=1700 deg/s			1700 deg		
Weight(cables not included)		46 kg		51 kg	48 kg		53 kg	50 kg		55 kg
Repeatability	Joints #1, #2	±0.025 mm								
	Joint #3	±0.01 mm								
	Joint #4	±0.005 deg								
Max. motion range	Joint #1	±152 deg	±107 deg		±152 deg		±107 deg	±152 deg		±107 deg
	Joint #2	±152.5 deg	±130 deg		±152.5 deg(±122.5 deg)* *:bellow Z:-360～-390 G10/20**1** / G10/20**4**=±151 deg(122.5 deg)* (Environment specification is cleanroom or Protected-model)					
	Joint #3	G10/20-**1**=180 mm / G10/20-**4**=420 mm (Environment specification is standard-model)								
		G10/20-**1**=150 mm / G10/20-**4**=390 mm (Environment specification is cleanroom or Protected-model)								
	Joint #4	±360 deg								
Payload	Rated	5 kg			G10=5 kg /G20=10kg			10 kg		
	Maximum	10 kg			G10=10 kg /G20=20kg			20 kg		
Standard cycle time*1		0.34 sec			0.37 sec			0.42 sec		
Joint #4 allowable moment of inertia*2	Rated	0.02 kg•m²			G10=0.02 kg•m² /G20=0.05 kg•m²			0.05 kg•m²		
	Maximum	0.25 kg•m²			G10=0.25 kg•m² /G20=0.45 kg•m²			0.45 kg•m²		
Motor power consumption	Joint #1	750 W								
	Joint #2	600 W								
	Joint #3	400 W								
	Joint #4	150 W								
Joint #3 down force		250 N								
Home		Home-return-less								
Installed wire for customer use		15Pin (D-Sub), 9Pin (D-Sub)								
Installed pneumatic tube for customer use		Φ4mm×2, Φ6mm×2								
Installation environment		Standard/Cleanroom*3+ESD/Protection*4								
Applicable Controller		RC180, RC620								
Safety standard		CE compliant, ANSI/RIA15.06-1999								

*1:Cycle time based on round-trip arch motion (300mm horizontal, 25mm vertical) with 2kg payload (path coordinates optimized for maximum speed).
*2:When payload center of gravity is aligned with Joint #4 ; if not aligned with Joint #4, set parameters using INERTIA command.
*3:Complies with ISO Class 3 (ISO14644-1) and older Class 10 (less than 10 0.1μm particles per 28,317cm³:1cft) cleanroom standards.
*4:G10-***D* with optional bellows complies with IP54; G10-***P* complies with IP65.

Smart

■ Outer Dimensions (Table Top Mounting)

[Unit: mm]

Standard-model

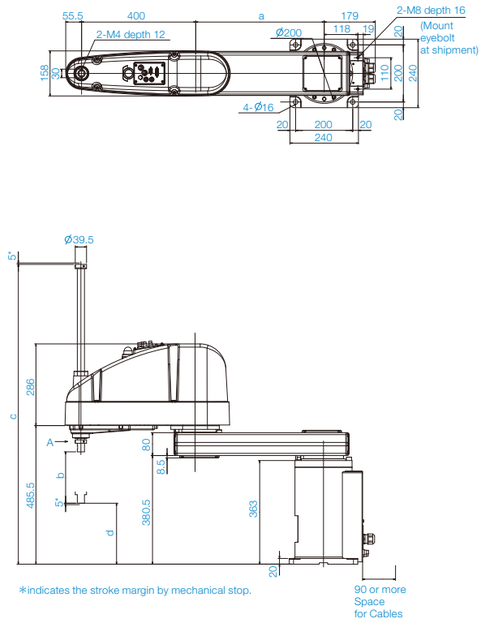

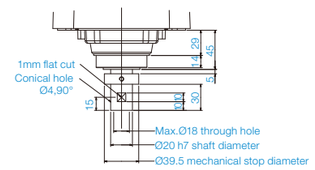

Detail of "A"
(Calibration point position of Joints #3 and #4)

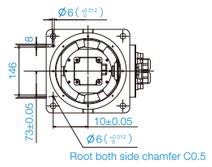

Reference through hole
(View from the bottom of the base)

	G10-65*S	G10/G20-85*S	G20-A0*S
a	250	450	600

	G10/G20-**1S	G10/G20-**4S
b	180	420
c	813.5	1053.5
d	213.5	-26.5

Cleanroom-model

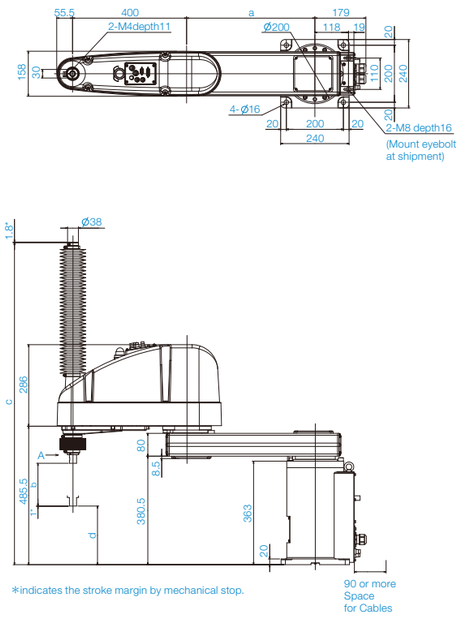

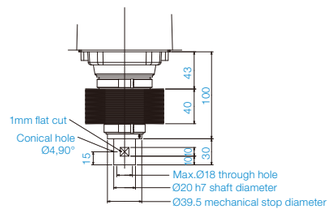

Detail of "A"
(Calibration point position of Joints #3 and #4)

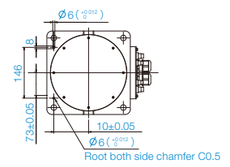

Reference through hole
(View from the bottom of the base)

	G10/65*C	G10/G20-85*C	G20-A0*C
a	250	450	600

	G10/G20-**1C	G10/G20-**4C
b	150	390
c	870.5	1129.5
d	205.5	-34.5

■ Motion Range (Table Top Mounting)

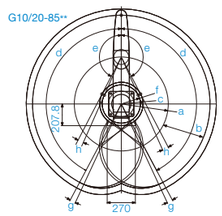

Model	Table Top Mounting				
	G10-65**	G10/20-85*			G20-A0
		S/D	C/P/D bellows		
a Length of Arm #1 (mm)	250	450			600
b Length of Arm #2 (mm)	400	400			400
c Motion range	212.4	207.8	Z:0～-360	207.8	307
			Z:-360～-390	218.3	
d Motion range of Joint #1 (degree)	152	152			152
e Motion range of Joint #2 (degree)	152.5	152.5	Z:0～-360	152.5	152.5
			Z:-360～-390	151	
f Mechanical stop area	199.4	183.3			285.4
g Joint #1 angle to hit mechanical stop (degree)	3	3			3
h Joint #1 angle to hit mechanical stop (degree)	3.5	3.5	Z:0～-360	3.5	3.5
			Z:-360～-390	5	

Outer Dimensions (Ceiling Mounting)

[Unit: mm]

Standard-model

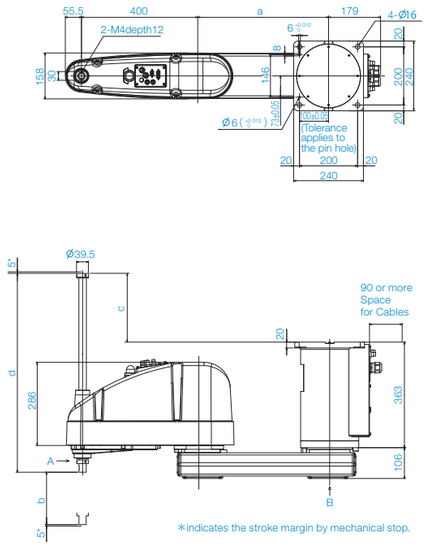

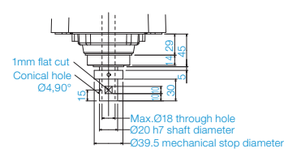

Detail of "A"
(Calibration point position of Joints #3 and #4)

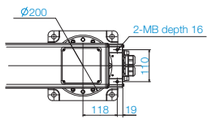

Detail of "B"

	G10-65°SR	G10/G20-85°SR	G20-A0°SR
a	250	450	600

	G10/G20-**1SR	G10/G20-**4SR
b	180	420
c	-27.5	212.5
d	420	660

Cleanroom-model

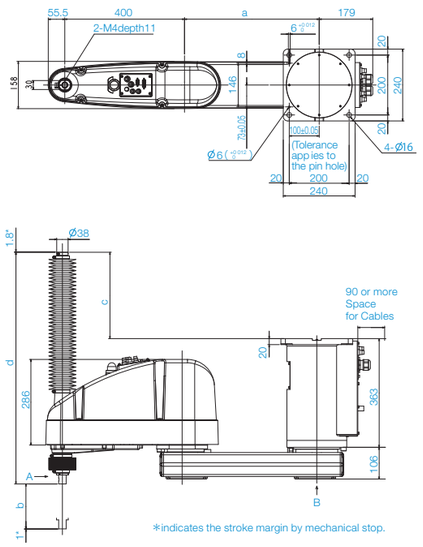

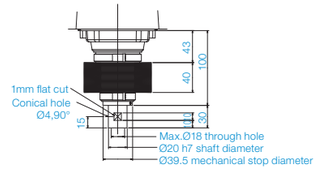

Detail of "A"
(Calibration point position of Joints #3 and #4)

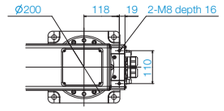

Detail of "B"

	G10-65°CR	G10/G20-85°CR	G20-A0°CR
a	250	450	600

	G10/G20-**1CR	G10/G20-**4CR
b	150	390
c	29.5	288.5
d	515	774

Motion Range (Ceiling Mounting)

G10/20-85**R

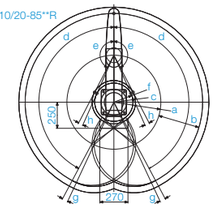

Model	Ceiling Mounting			
	G10-65**R	G10/20-85*		G20-A0**W
		SR/DR	CR/PR/DR bellows	
a Length of Arm #1 (mm)	250	450		600
b Length of Arm #2 (mm)	400	400		400
c Motion range	306.5	207.8	218.3	307
d Motion range of Joint #1 (degree)	107	152		152
e Motion range of Joint #2 (degree)	130	152.5	151	152.5
f Mechanical stop area	291.2	183.3		285.4
g Joint #1 angle to hit mechanical stop (degree)	3	3		3
h Joint #2 angle to hit mechanical stop (degree)	3.5	3.5	5	3.5

Outer Dimensions (Wall Mounting)

[Unit: mm]

Standard-model

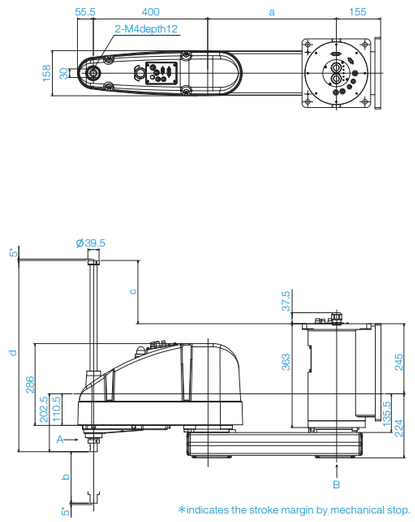

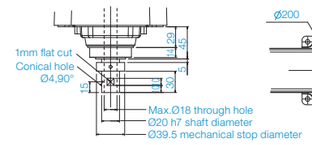

Detail of "A"
(Calibration point position of Joints #3 and #4)

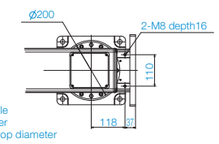

Detail of "B"

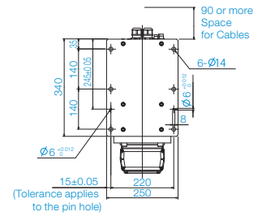

Reference through hole
(View from the bottom of the base)

	G10-65°SW	G10/G20-85°SW	G20-A0°SW
a	250	450	600

	G10/G20-**1SW	G10/G20-**4SW
b	180	420
c	-27.5	212.5
d	420	660

Cleanroom-model

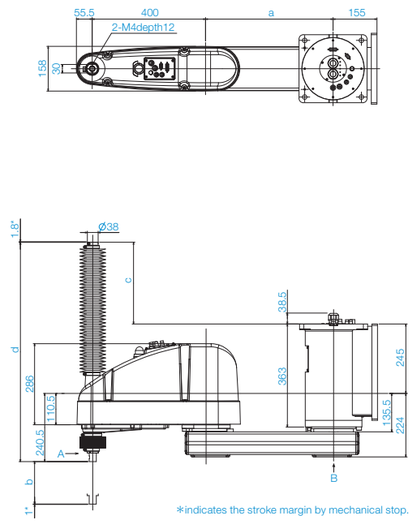

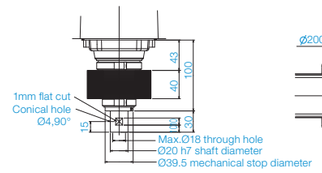

Detail of "A"
(Calibration point position of Joints #3 and #4)

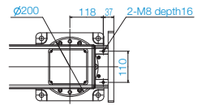

Detail of "B"

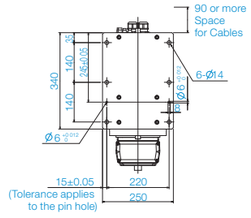

Reference through hole
(View from the bottom of the base)

	G10-65°CW	G10/G20-85°CW	G20-A0°CW
a	250	450	600

	G10/G20-**1CW	G10/G20-**4CW
b	150	390
c	29.5	288.5
d	515	774

Motion Range (Wall Mounting)

G10/20-85**W

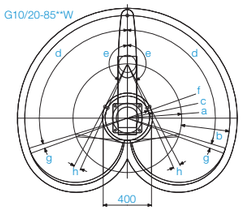

Model	Wall Mounting			
	G10-65**W	G10/20-85*		G20-A0**W
		SW/DW	CW/PW/DW bellows	
a Length of Arm #1 (mm)	250	450		600
b Length of Arm #2 (mm)	400	400		400
c Motion range	306.5	207.8	218.3	307
d Motion range of Joint #1 (degree)	107	107		107
e Motion range of Joint #2 (degree)	130	152.5	151	152.5
f Mechanical stop area	291.2	183.3		285.4
g Joint #1 angle to hit mechanical stop (degree)	3	3		3
h Joint #2 angle to hit mechanical stop (degree)	3.5	3.5	5	3.5